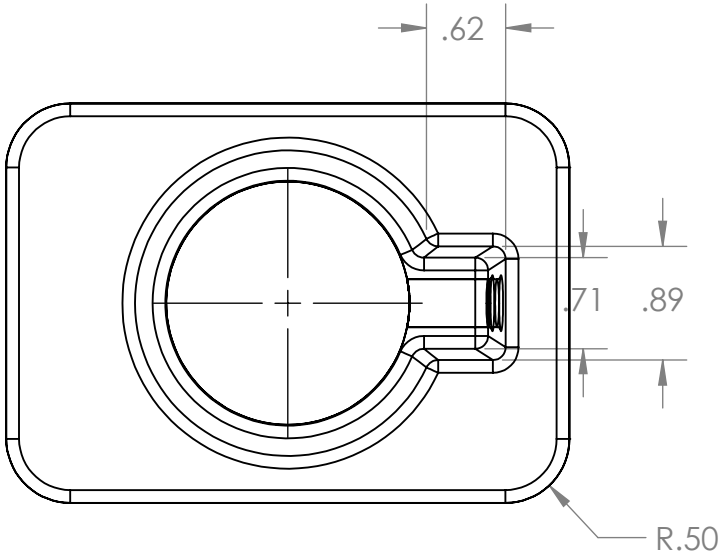

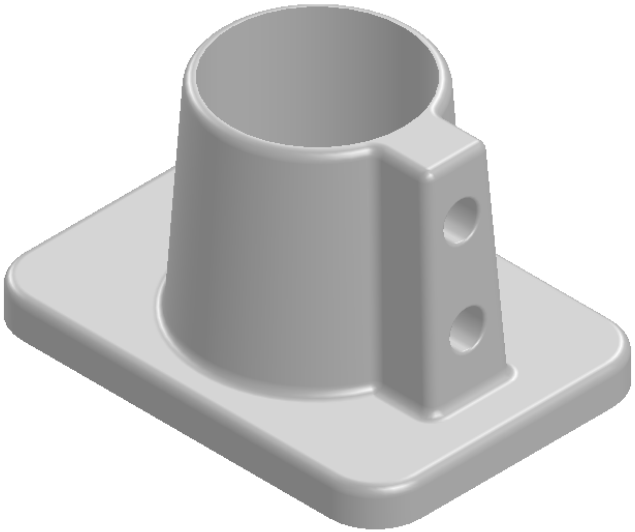

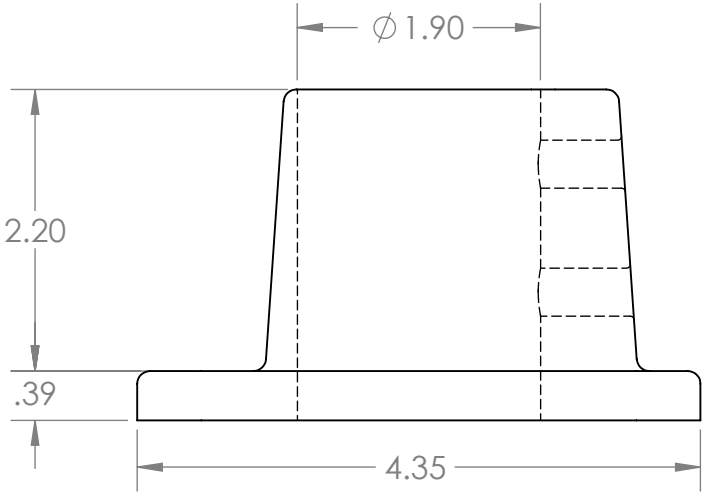

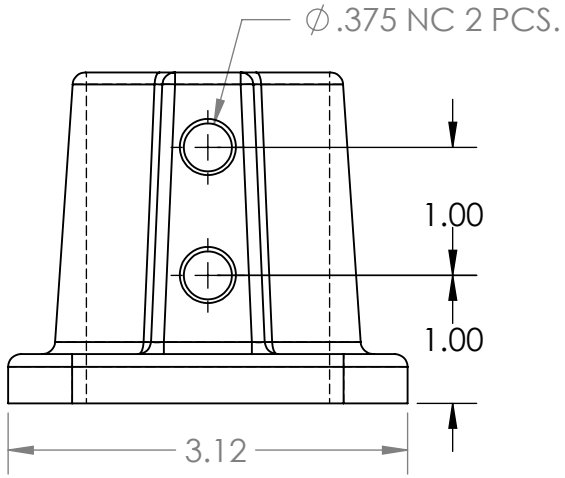

PROPRIETARY AND CONFIDENTIAL

THE INFORMATION CONTAINED IN THIS DRAWING IS THE SOLE PROPERTY OF FRASER BRONZE FOUNDRY, INC. ANY REPRODUCTION IN PART OR AS A WHOLE WITHOUT THE WRITTEN PERMISSION OF FRASER BRONZE FOUNDRY, INC. IS PROHIBITED.

NEXT ASSY	USED ON
APPLICATION	

UNLESS OTHERWISE SPECIFIED:

DIMENSIONS ARE IN INCHES
TOLERANCES:
FRACTIONAL ±
ANGULAR: MACH ± BEND ±
TWO PLACE DECIMAL ±
THREE PLACE DECIMAL ±

ITEM# FR 061.0

MATERIAL A356 ALUMINUM

FINISH

DO NOT SCALE DRAWING

	NAME	DATE
DRAWN	KJF	12/23/14
CHECKED		
ENG APPR.		
MFG APPR.		
Q.A.		

COMMENTS:

FRASER BRONZE FOUNDRY, INC

TITLE:

STANCHION BASE

SIZE	DWG. NO.	REV
A	FR 061.0	

SCALE: 1:2 WEIGHT: .69 SHEET 1 OF 1

5 4 3 2 1